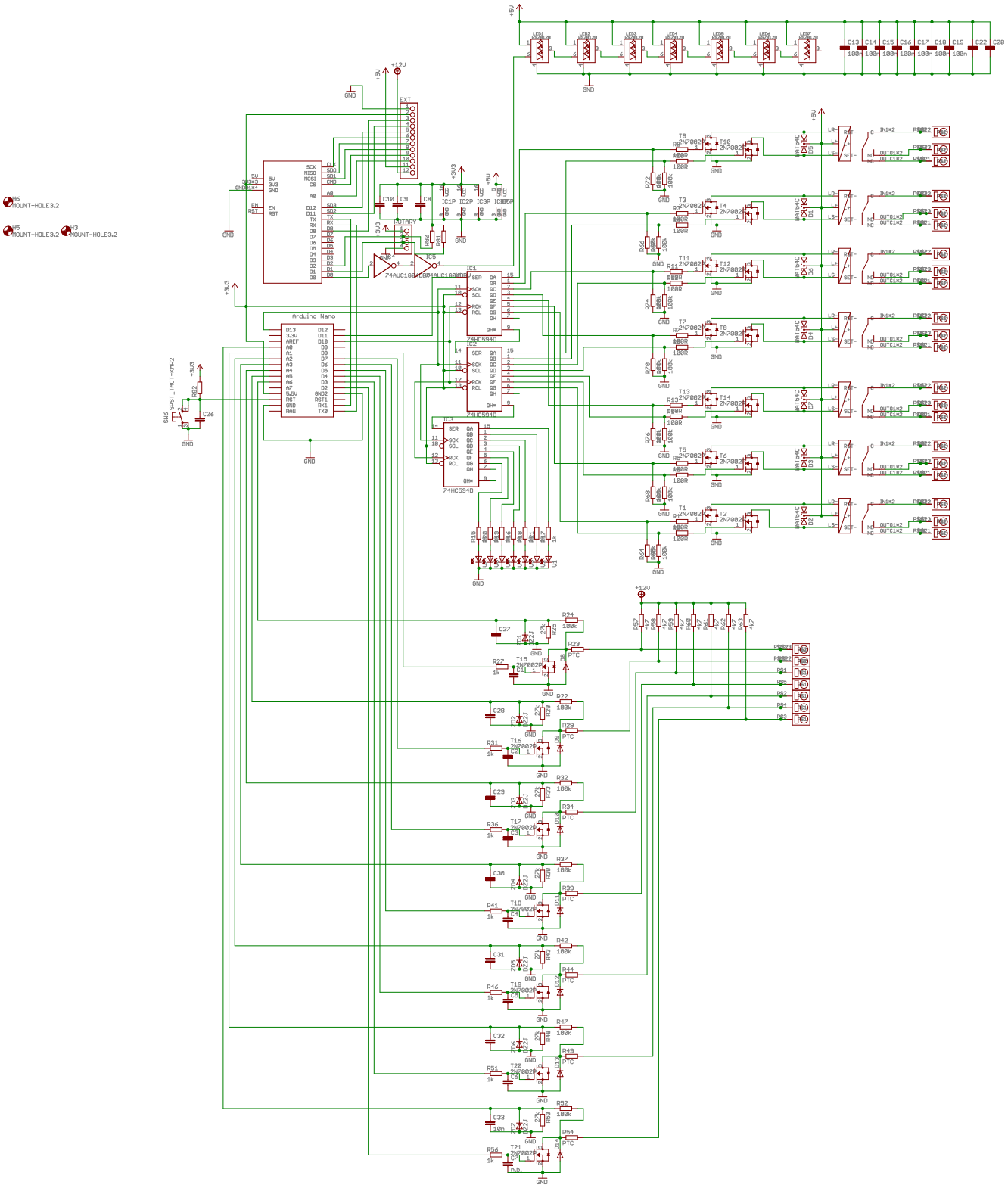
Arduino Nano
74HC594D
74AUC1G04
2N7002K
PTC
EXT
ROTARY
SPST_TACT-KMR2
MOUNT-HOLE3.2
+5V
+12V
+3V3
GND

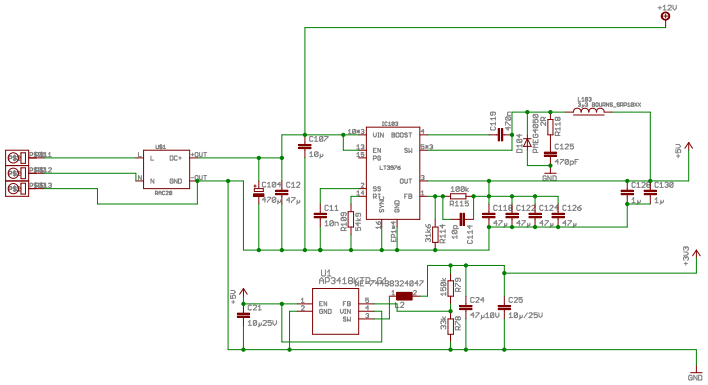
+12V
U84
L
DC+
N
GND
RNC20
+OUT
-OUT
C107
10µ
C104
470µ
C12
47µ
IC103
UIN
BOOST
EN
PG
SW3
SW2
LT3976
SS
OUT
FB
GND
C11
10n
R116
5.6k
R114
5.6k
R115
100k
C114
10p
C119
22p
D104
R117
R118
C125
470pF
L103
C118
47µ
C122
47µ
C124
47µ
C126
47µ
C128
1µ
C130
1µ
+5V
+3V3
U1
AP3418KTR-G1
EN
FB
GND
UIN
SW
C21
10µ25V
R79
C24
47µ10V
C25
10µ/25V
GND